MOEN®

Illustrated Parts

- **Order by Part Number**
- **Trim can be used with U231 series or U361 series valves**

90 DEGREE™
M-CORE Transfer Valve Trim Kit

MODEL	HANDLE	FINISH
UTS4172	Lever	Chrome
UTS4172BN	Lever	Brushed Nickel

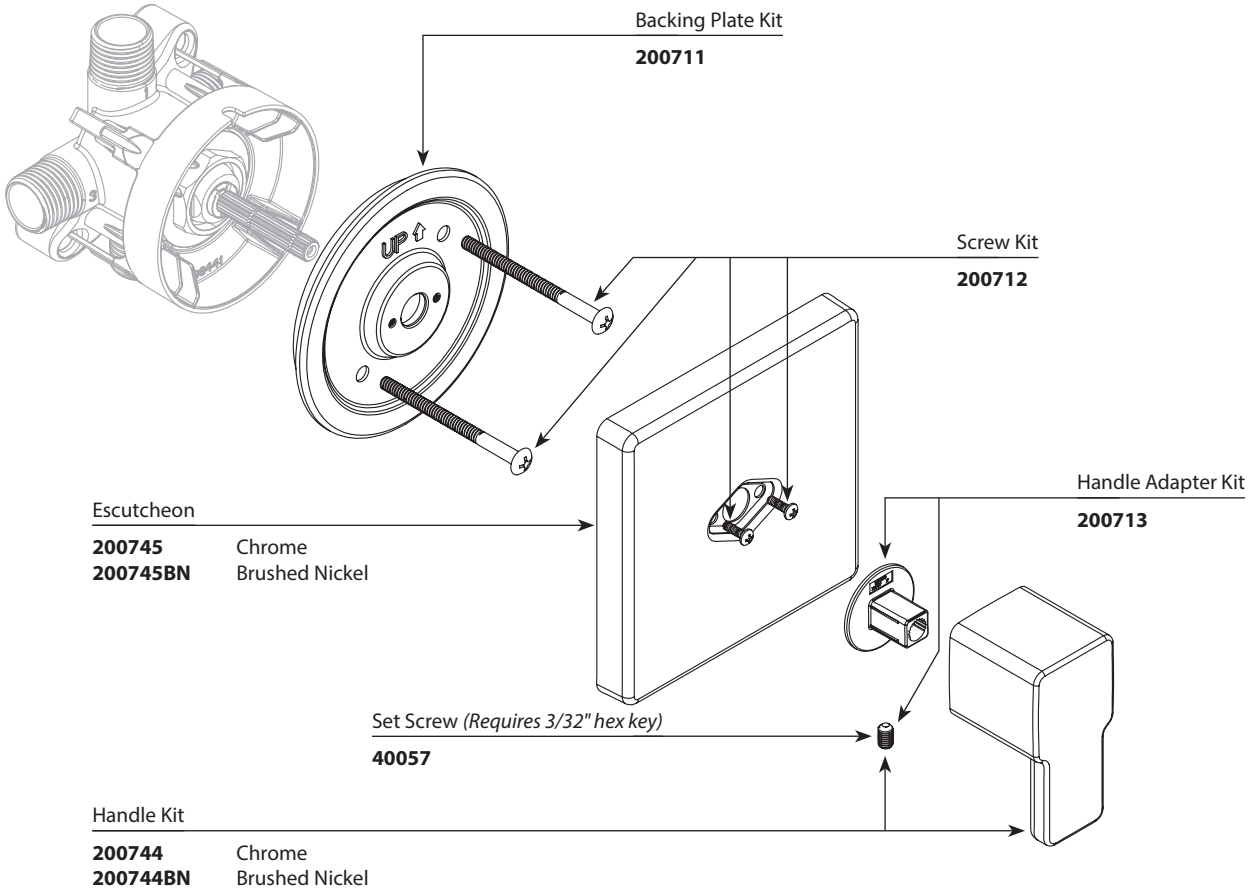

Optional 2" Handle Extension Kit 200760

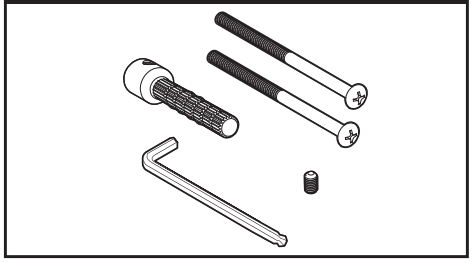

TO ORDER PARTS CALL: 1-800-BUY-MOEN
www.moen.com

06/08/2020 EXP.2340 50000408272
Released 00